STD1HNC60

N-CHANNEL 600V - 4Ω - 2A - IPAK/DPAK
PowerMesh™II MOSFET

TYPE	V_{DSS}	$R_{DS(on)}$	I_D
STD1HNC60	600 V	< 5 Ω	2 A

- TYPICAL $R_{DS}(on)$ = 4 Ω
- EXTREMELY HIGH dv/dt CAPABILITY
- 100% AVALANCHE TESTED
- NEW HIGH VOLTAGE BENCHMARK
- GATE CHARGE MINIMIZED

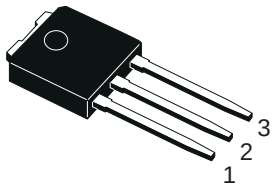

IPAK
TO-251

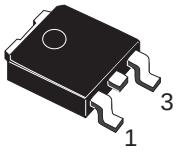

DPAK
TO-252

DESCRIPTION

The PowerMESH™II is the evolution of the first generation of MESH OVERLAY™. The layout refinements introduced greatly improve the Ron*area figure of merit while keeping the device at the leading edge for what concerns swithing speed, gate charge and ruggedness.

APPLICATIONS

- HIGH CURRENT, HIGH SPEED SWITCHING
- SWITH MODE POWER SUPPLIES (SMPS)
- DC-AC CONVERTERS FOR WELDING EQUIPMENT AND UNINTERRUPTIBLE POWER SUPPLIES AND MOTOR DRIVER

INTERNAL SCHEMATIC DIAGRAM

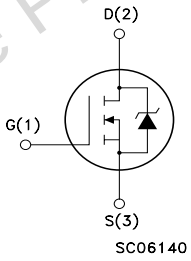

Obsolete Product(s) - Obsolete Product(s)

ABSOLUTE MAXIMUM RATINGS

Symbol	Parameter	Value	Unit
V_{DS}	Drain-source Voltage (V_{GS} = 0)	600	V
V_{DGR}	Drain-gate Voltage (R_{GS} = 20 kΩ)	600	V
V_{GS}	Gate- source Voltage	±30	V
I_D	Drain Current (continuos) at T_C = 25°C	2	A
I_D	Drain Current (continuos) at T_C = 100°C	1.3	A
I_{DM} (1)	Drain Current (pulsed)	8	A
P_{TOT}	Total Dissipation at T_C = 25°C	50	W
	Derating Factor	0.4	W/°C
dv/dt	Peak Diode Recovery voltage slope	3.5	V/ns
T_{stg}	Storage Temperature	–65 to 150	°C
T_j	Max. Operating Junction Temperature	150	°C

(•)Pulse width limited by safe operating area

(1)I_{SD} ≤ 2A, di/dt ≤100A/µs, V_{DD} ≤ $V_{(BR)DSS}$, T_j ≤ T_{JMAX}

.

THERMAL DATA

Rthj-case	Thermal Resistance Junction-case Max	2.5	°C/W
Rthj-amb	Thermal Resistance Junction-ambient Max	100	°C/W
Rthj-sink	Thermal Resistance case-sink Typ	1.5	°C/W
T_l	Maximum Lead Temperature For Soldering Purpose	275	°C

AVALANCHE CHARACTERISTICS

Symbol	Parameter	Max Value	Unit
I_{AR}	Avalanche Current, Repetitive or Not-Repetitive (pulse width limited by T_j max)	2	A
E_{AS}	Single Pulse Avalanche Energy (starting T_j = 25 °C, $I_D = I_{AR}$, V_{DD} = 50 V)	120	mJ

ELECTRICAL CHARACTERISTICS (TCASE = 25 °C UNLESS OTHERWISE SPECIFIED)

OFF

Symbol	Parameter	Test Conditions	Min.	Typ.	Max.	Unit
$V_{(BR)DSS}$	Drain-source Breakdown Voltage	I_D = 250 µA, V_{GS} = 0	600			V
I_{DSS}	Zero Gate Voltage Drain Current (V_{GS} = 0)	V_{DS} = Max Rating			1	µA
		V_{DS} = Max Rating, T_C = 125 °C			50	µA
I_{GSS}	Gate-body Leakage Current (V_{DS} = 0)	V_{GS} = ±30V			±100	nA

ON (1)

Symbol	Parameter	Test Conditions	Min.	Typ.	Max.	Unit
$V_{GS(th)}$	Gate Threshold Voltage	$V_{DS} = V_{GS}$, I_D = 250µA	2	3	4	V
$R_{DS(on)}$	Static Drain-source On Resistance	V_{GS} = 10V, I_D = 1 A		4	5	Ω
$I_{D(on)}$	On State Drain Current	$V_{DS} > I_{D(on)} \times R_{DS(on)max}$, V_{GS} = 10V	2			A

DYNAMIC

Symbol	Parameter	Test Conditions	Min.	Typ.	Max.	Unit
g_{fs} (1)	Forward Transconductance	$V_{DS} > I_{D(on)} \times R_{DS(on)max}$, I_D = 1A		2		S
C_{iss}	Input Capacitance	V_{DS} = 25V, f = 1 MHz, V_{GS} = 0		228		pF
C_{oss}	Output Capacitance			40		pF
C_{rss}	Reverse Transfer Capacitance			6		pF

Obsolete Product(s) - Obsolete Product(s)

ELECTRICAL CHARACTERISTICS (CONTINUED)

SWITCHING ON

Symbol	Parameter	Test Conditions	Min.	Typ.	Max.	Unit
$t_{d(on)}$ t_r	Turn-on Delay Time Rise Time	V_{DD} = 300V, I_D = 1 A R_G = 4.7Ω V_{GS} = 10V (see test circuit, Figure 3)		9 8.5		ns ns
Q_g Q_{gs} Q_{gd}	Total Gate Charge Gate-Source Charge Gate-Drain Charge	V_{DD} = 480V, I_D = 2 A, V_{GS} = 10V		11.3 2.8 5	15.5	nC nC nC

SWITCHING OFF

Symbol	Parameter	Test Conditions	Min.	Typ.	Max.	Unit
$t_{r(Voff)}$ t_f t_c	Off-voltage Rise Time Fall Time Cross-over Time	V_{DD} = 480V, I_D = 2 A, R_G = 4.7Ω, V_{GS} = 10V (see test circuit, Figure 5)		18 9 27		ns ns ns

SOURCE DRAIN DIODE

Symbol	Parameter	Test Conditions	Min.	Typ.	Max.	Unit
I_{SD}	Source-drain Current				2	A
I_{SDM} (2)	Source-drain Current (pulsed)				8	A
V_{SD} (1)	Forward On Voltage	I_{SD} = 2 A, V_{GS} = 0			1.6	V
t_{rr}	Reverse Recovery Time	I_{SD} = 2A, di/dt = 100A/µs, V_{DD} = 100V, Tj = 150°C (see test circuit, Figure 5)		480		ns
Q_{rr}	Reverse Recovery Charge			1032		nC
I_{RRM}	Reverse Recovery Current			4.3		A

Note: 1. Pulsed: Pulse duration = 300 µs, duty cycle 1.5 %.
2. Pulse width limited by safe operating area.

Obsolete Product(s) - Obsolete Product(s)

Safe Operating Area

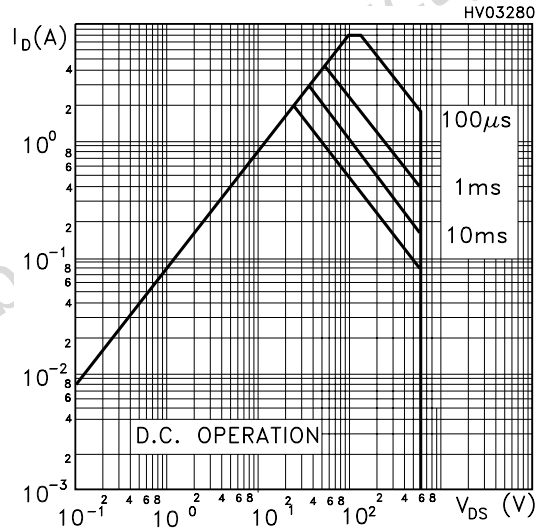

Thermal Impedence

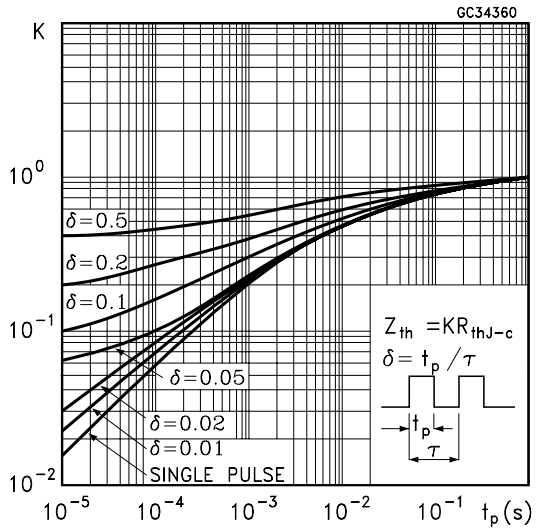

Output Characteristics

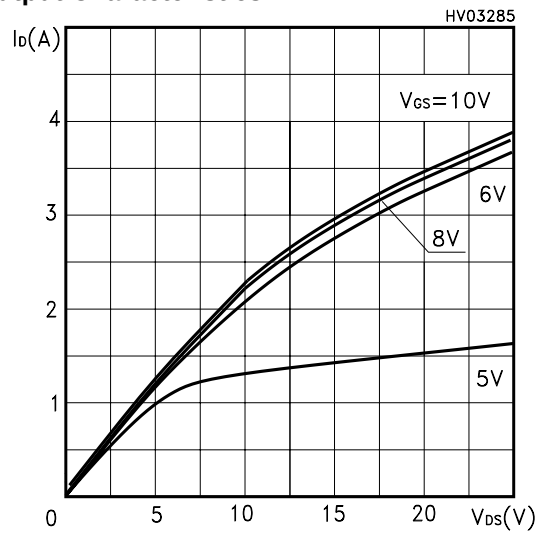

Transfer Characteristics

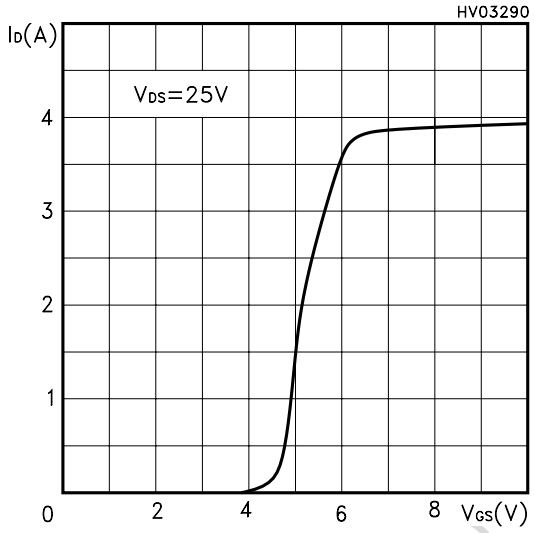

Transconductance

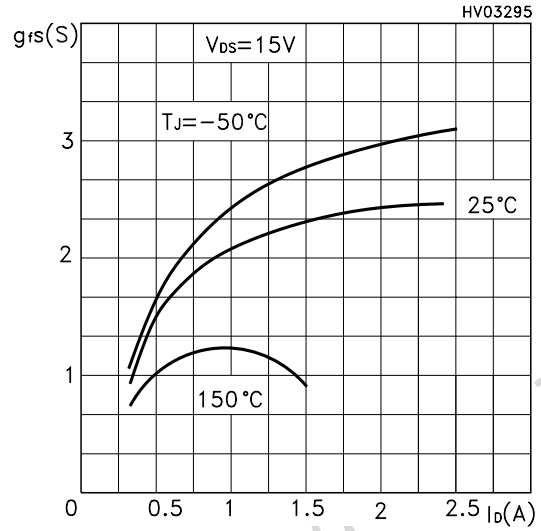

Static Drain-source On Resistance

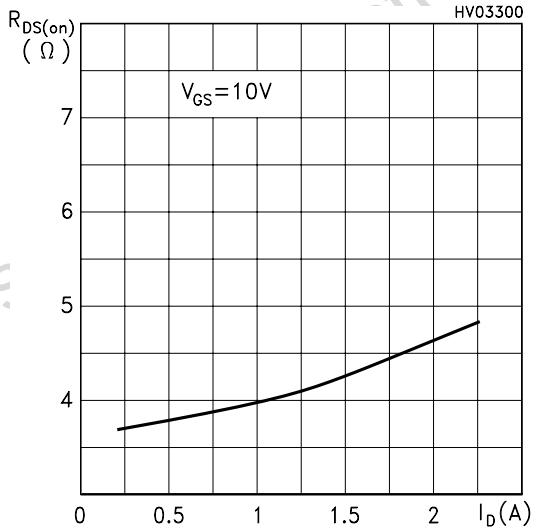

Gate Charge vs Gate-source Voltage

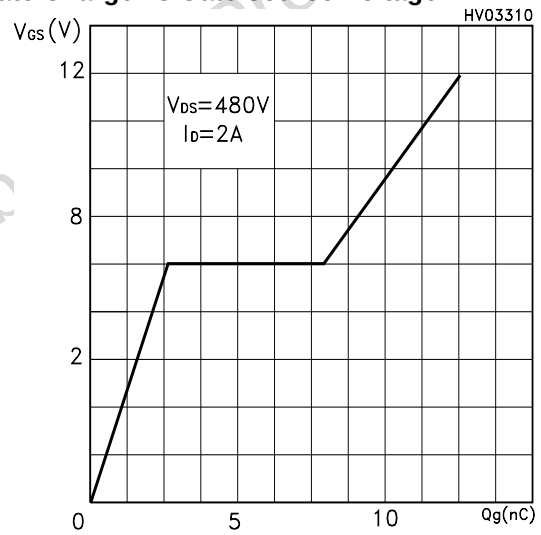

Capacitance Variations

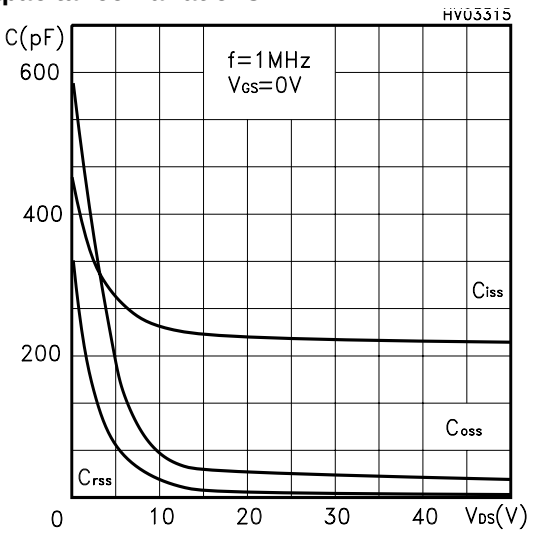

Normalized Gate Threshold Voltage vs Temperature

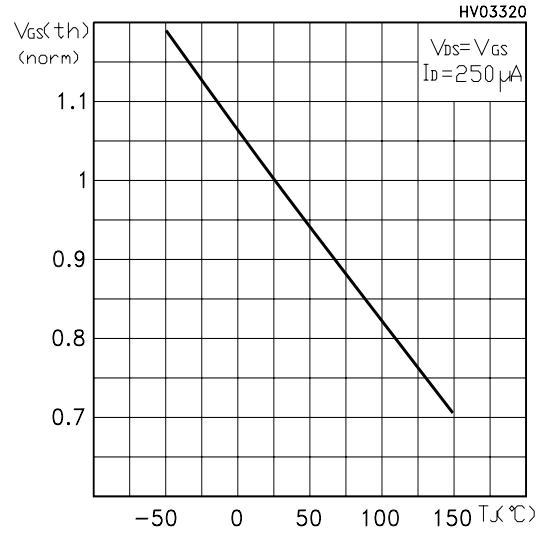

Normalized On Resistance vs Temperature

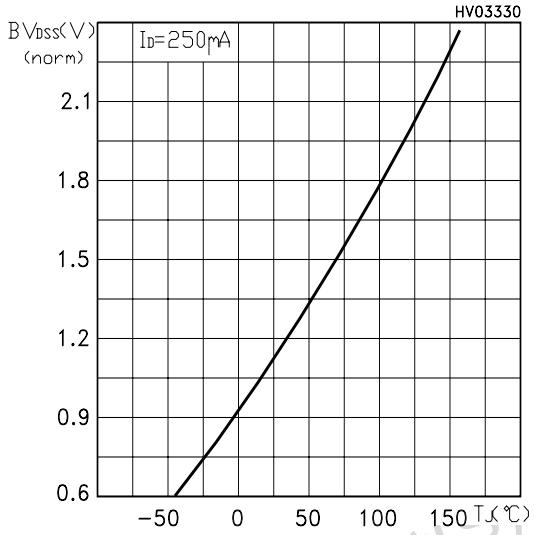

Source-drain Diode Forward Characteristics

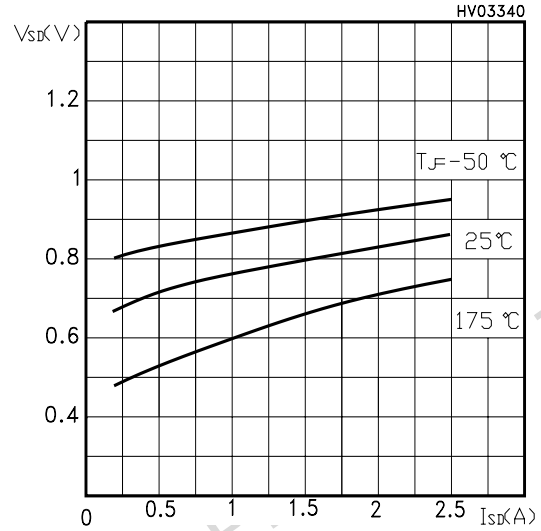

Obsolete Product(s) - Obsolete Product(s)

Fig. 1: Unclamped Inductive Load Test Circuit

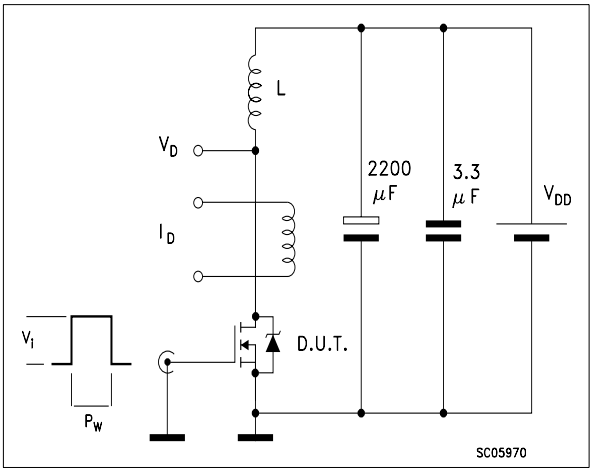

Fig. 2: Unclamped Inductive Waveform

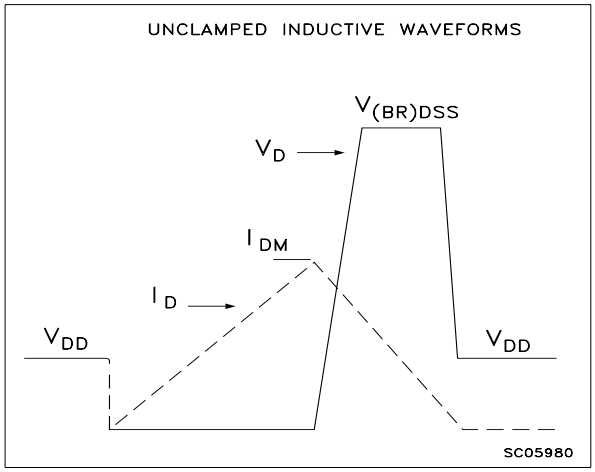

Fig. 3: Switching Times Test Circuit For Resistive Load

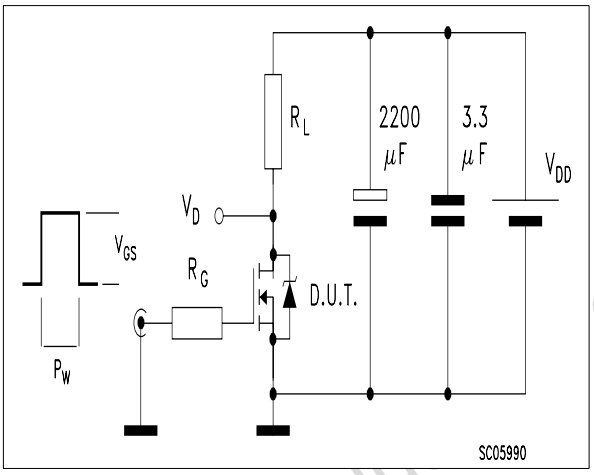

Fig. 4: Gate Charge test Circuit

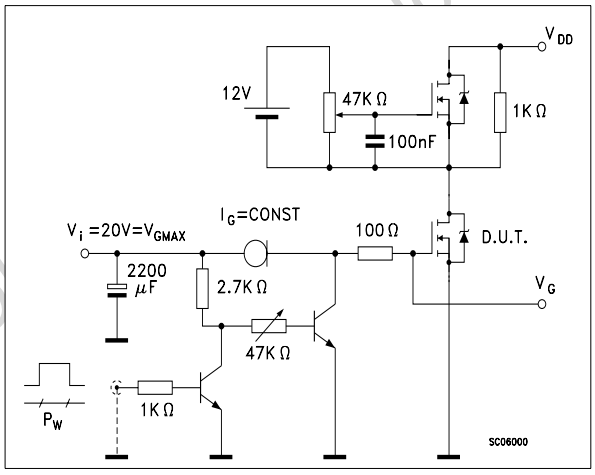

Fig. 5: Test Circuit For Inductive Load Switching And Diode Recovery Times

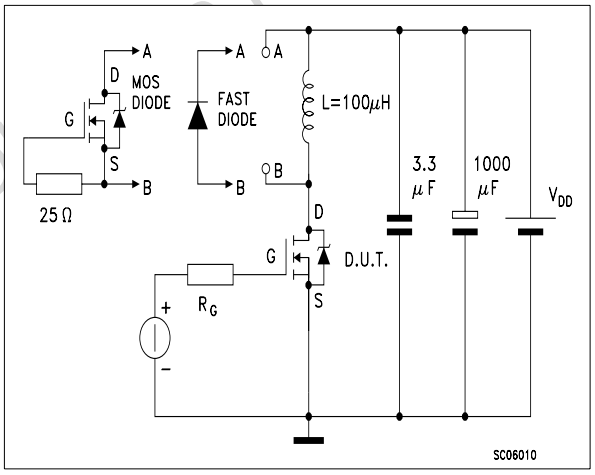

TO-252 (DPAK) MECHANICAL DATA

DIM.	mm			inch		
	MIN.	TYP.	MAX.	MIN.	TYP.	MAX.
A	2.20		2.40	0.087		0.094
A1	0.90		1.10	0.035		0.043
A2	0.03		0.23	0.001		0.009
B	0.64		0.90	0.025		0.035
B2	5.20		5.40	0.204		0.213
C	0.45		0.60	0.018		0.024
C2	0.48		0.60	0.019		0.024
D	6.00		6.20	0.236		0.244
E	6.40		6.60	0.252		0.260
G	4.40		4.60	0.173		0.181
H	9.35		10.10	0.368		0.398
L2		0.8			0.031	
L4	0.60		1.00	0.024		0.039
V2	0°		8°	0°		0°

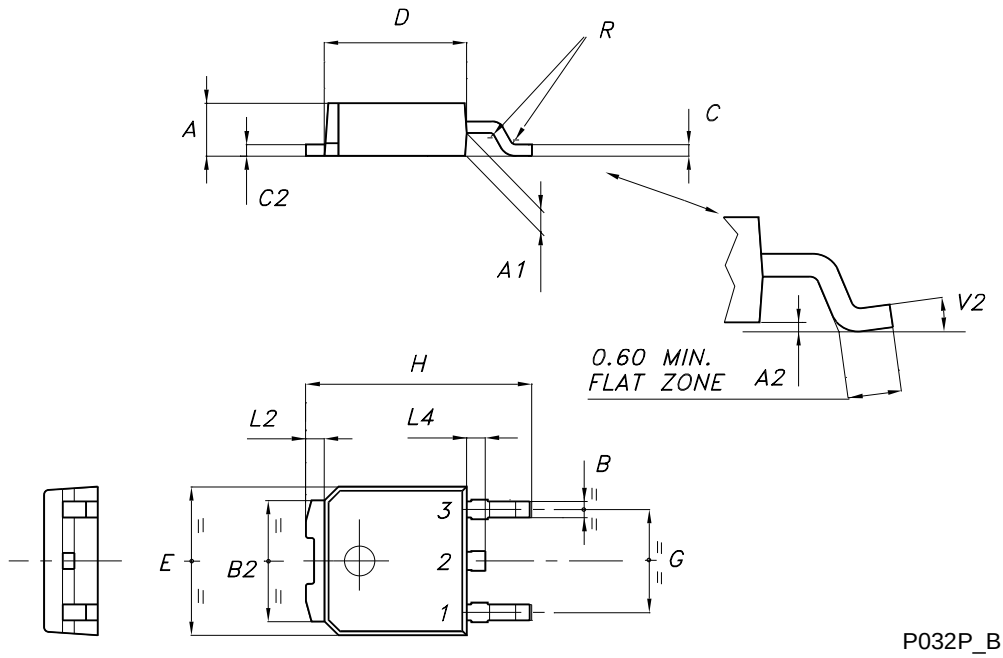

P032P_B

TO-251 (IPAK) MECHANICAL DATA

DIM.	mm			inch		
	MIN.	TYP.	MAX.	MIN.	TYP.	MAX.
A	2.2		2.4	0.086		0.094
A1	0.9		1.1	0.035		0.043
A3	0.7		1.3	0.027		0.051
B	0.64		0.9	0.025		0.031
B2	5.2		5.4	0.204		0.212
B3			0.85			0.033
B5		0.3			0.012	
B6			0.95			0.037
C	0.45		0.6	0.017		0.023
C2	0.48		0.6	0.019		0.023
D	6		6.2	0.236		0.244
E	6.4		6.6	0.252		0.260
G	4.4		4.6	0.173		0.181
H	15.9		16.3	0.626		0.641
L	9		9.4	0.354		0.370
L1	0.8		1.2	0.031		0.047
L2		0.8	1		0.031	0.039

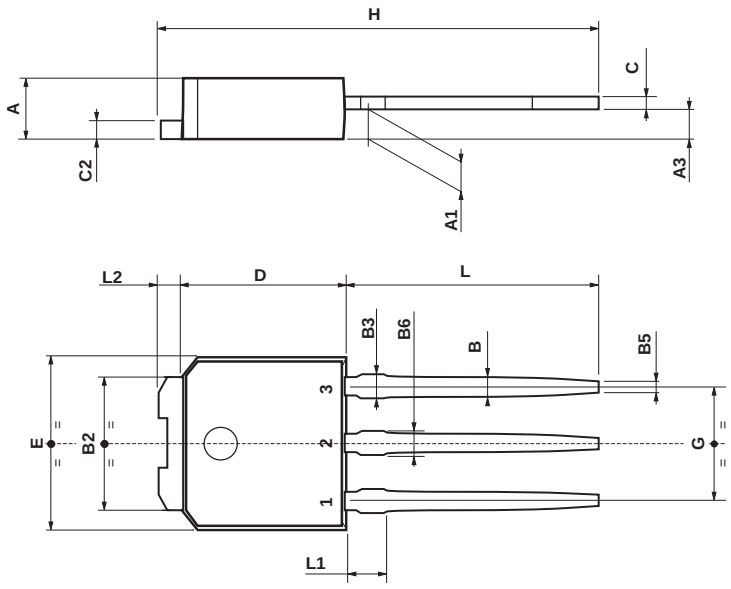

0068771-E

Information furnished is believed to be accurate and reliable. However, STMicroelectronics assumes no responsibility for the consequences of use of such information nor for any infringement of patents or other rights of third parties which may result from its use. No license is granted by implication or otherwise under any patent or patent rights of STMicroelectronics. Specification mentioned in this publication are subject to change without notice. This publication supersedes and replaces all information previously supplied. STMicroelectronics products are not authorized for use as critical components in life support devices or systems without express written approval of STMicroelectronics.

The ST logo is a trademark of STMicroelectronics

© 2000 STMicroelectronics – Printed in Italy – All Rights Reserved

STMicroelectronics GROUP OF COMPANIES

Australia - Brazil - China - Finland - France - Germany - Hong Kong - India - Italy - Japan - Malaysia - Malta - Morocco - Singapore - Spain - Sweden - Switzerland - United Kingdom - U.S.A.

http://www.st.com